REVISIONS FOR DWG # CB12xx				
REV	CH.NO.	DESCRIPTION	DATE	REVISED BY
–	–	ORIGINAL DESIGN	01/16/14	ARON G

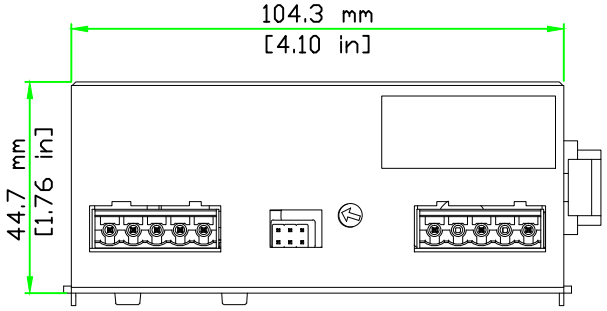

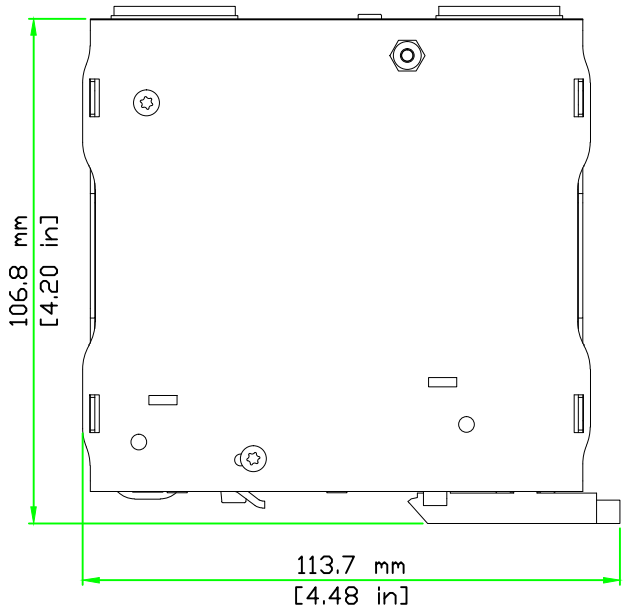

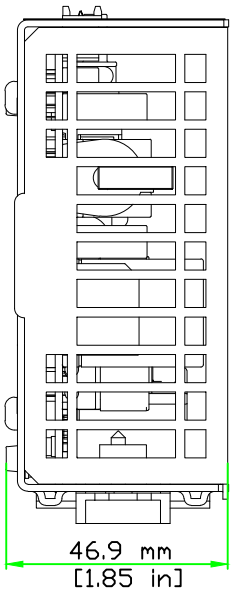

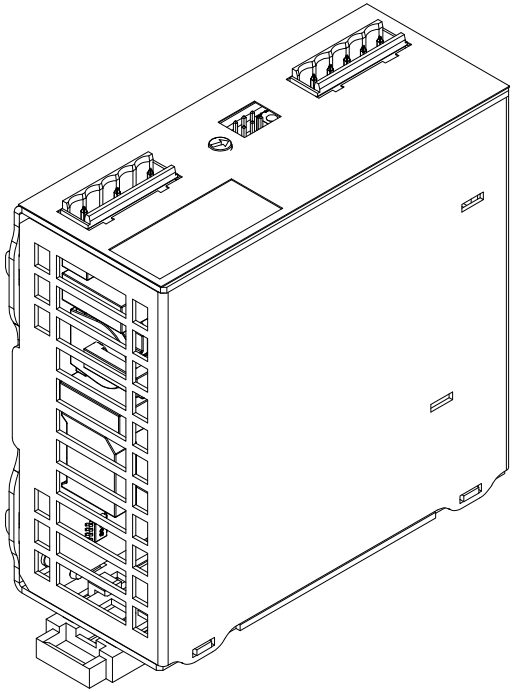

UNLESS OTHERWISE SPECIFIED
- ALL DIMENSIONS ARE IN MILLIMETERS
- THIRD ANGLE PROJECTION

- TOLERANCE

XX	≙	1.00 mm
XX.X	≙	0.50 mm
XX.XX	≙	0.20 mm
ALL	≙	XX mm

METRIC

35 Royal Road
Flemington NJ 08822-6000
(908) 806-9400 • Fax (908) 806-9490

TITLE: BATTERY CHARGER
PN: CB12xx

DRAWN BY: ARON G	06/16/16	DRAWING NO.: M–CAD–20–CB–CB12xx	REV.: –
CHECKED BY: LASZLO G	06/16/16		
RELEASED BY: LASZLO G	06/16/16	SCALE: –	SHEET: 1 OF: 1