Plastic bodied limit switch

Series IF

Description **IF-SU1Z RIW**	Article number **6089167007**

Operating symbol

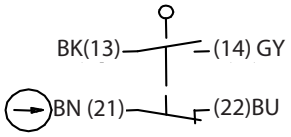

Operating diagram

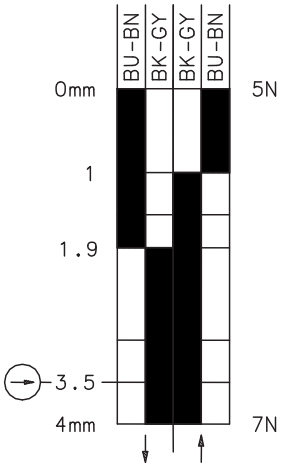

On Off

Tolerance:
Operating point ± 0,25 mm;
Operating torque ± 10 %

Fixed positioning for safety applications
Mounting screw M5 according to DIN 912 or DIN EN ISO 4762

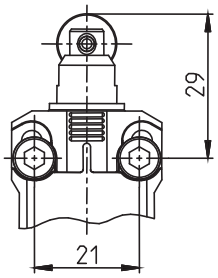

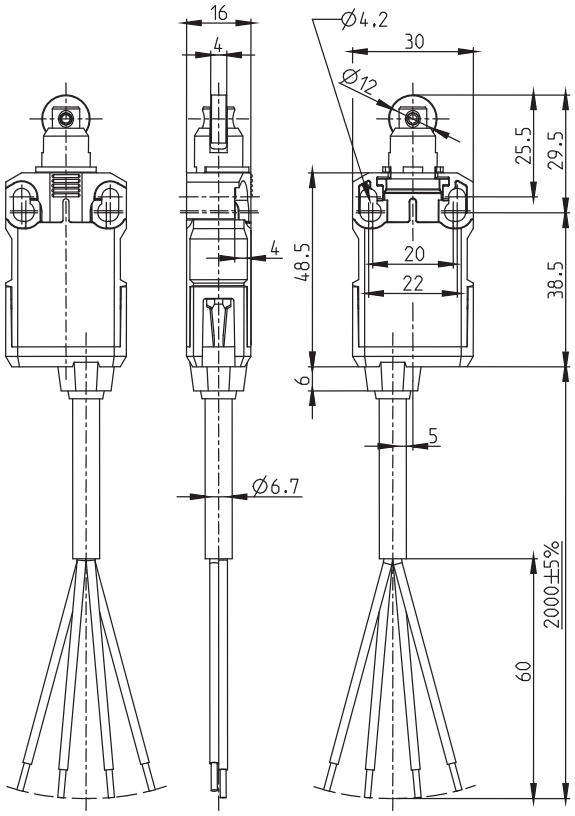

Electrical Data		
Rated insulation voltage	U_i	250 V AC
Conv. thermal current	I_{the}	10 A
Rated operational voltage	U_e	240 V
Utilization category		AC-15, U_e/I_e 240 V / 3 A
Direct opening action	⊖	acc. to IEC/EN 60947-5-1, annex K
Short-circuit protective device		Fuse 6 A gG
Protection class		II, totally insulated

Mechanical data	
Enclosure	PA6 (glass fibre reinforced)
Cover	PA6 (glass fibre reinforced)
Actuator	Roller (steel)
Ambient air temperature	-25 °C … +70 °C (cable in fixed position)
Contact type	Snap action, 1 NO, 1 NC (Zb)
Mechanical life	3 x 10^6 switching cycles
Switching frequency	≤ 30 / min.
Assembly	2 x M4 or 2 x M5
Connection	Cable 4 x 0,75 mm^2
Weight	≈ 0,18 kg
Installation position	operator definable
Protection type	IP67 acc. to IEC/EN 60529; DIN VDE 0470 T1

Actuation
Operating direction: from 2 sides The actuating head can be turned in steps of 90° by lifting the clamp. This means that it can be approached from 4 different directions.

ID for safety engineering	
B10d	6 x 10^6 cycles

Standards	
	VDE 0660 T100, DIN EN 60947-1, IEC 60947-1
	VDE 0660 T200, DIN EN 60947-5-1, IEC 60947-5-1
	DIN EN ISO 13849-1

EU Conformity	
	acc. to directive 2006/42/EC

Approvals	
	$_{c}CSA_{US}$ A300, Q300

Notes
The indicated protection class (IP-code) is only valid when the actuator is correctly mounted.